Chapter One

Introduction to Oil Refinery Processes

Lecture Objectives:

After studying this chapter, you should be able to:

- Know the History and Development of Refining Processes
- Know the types of Refineries
- Deep knowledge about Refinery Feed stocks and Products

Pretests:

1- Why refineries are existed?

2- How many types of petroleum refinery are available ?

3- what are the feed stocks and the outputs of a typical oil refinery?

Before answering these questions, let's talk a little bit about the most common energy source that has been used in our daily life activities (Driving vehicles, cooking food, Aircrafts fuel, and others. Think and let me know your answer>

1.0 History and Development of Refining Processes

Petroleum refining is a unique and critical link in the petroleum supply chain, from the wellhead to the pump. The other links add value to petroleum mainly by moving and storing it (e.g., lifting crude oil to the surface; moving crude oil from oil fields to storage facilities and then to refineries; moving refined products from refinery to terminals and end-use locations, etc.). Refining adds value by converting crude oil (which in itself has little end-use value) into a range of refined products, including transportation fuels. The primary economic objective in refining is to maximize the value added in converting crude oil into finished products.

Petroleum refining plays an important role in our lives. Most transportation vehicles are powered by refined products such as gasoline, diesel, aviation turbine kerosene (ATK) and fuel oil.

The recent price rise of crude oil from $50 to $150 per bbl over the last 2 years has affected the refining industry in three ways: First is an increased search for fuel products from non-fossil sources such as biodiesel and alcohols from vegetable sources, second is the development of better methods to process tar sand, coal gasification and synthesis of fuels by Fischer–Tropsch (FT) technology and third is the initiation of long-term plans to look for renewable energy sources. However, crude oil prices are still a cheap source for transportation fuels and petrochemicals. On the other hand, stricter environment regulations have raised the cost of producing clean fuels. This motivated the search for producing clean fuels by non-conventional methods, such as by ambient desulphurization by liquid oxidants. Olefin alkylation and Fischer–Tropsch are other possible methods for producing clean fuels. New technology and better design of refinery equipment are also being developed in order to produce clean and less expense fuels.

In the modern refinery, the refining processes are classified as either physical separation or chemical conversion ones. Examples for each class are:

Table 1: physical and chemical separation processes

	Chemical conversion	
Physical separation	Catalytic	Thermal
Distillation	Reforming	Delayed coking
Solvent deasphalting	Hydrotreating	Flexicoking
Solvent extraction	Hydrocracking	Visbreaking
Solvent dewaxing	Alkylation	
	Isomerization	

A Generic Refining Process Schematic show the most important processes of a typical refinery started from the crude injection to the first distillation tower into products final uses. As you can see from **Figure 1** in below that each process has a purpose of use such as

(Separating, treating, recovering, and fractionating in order to produce the desired products.

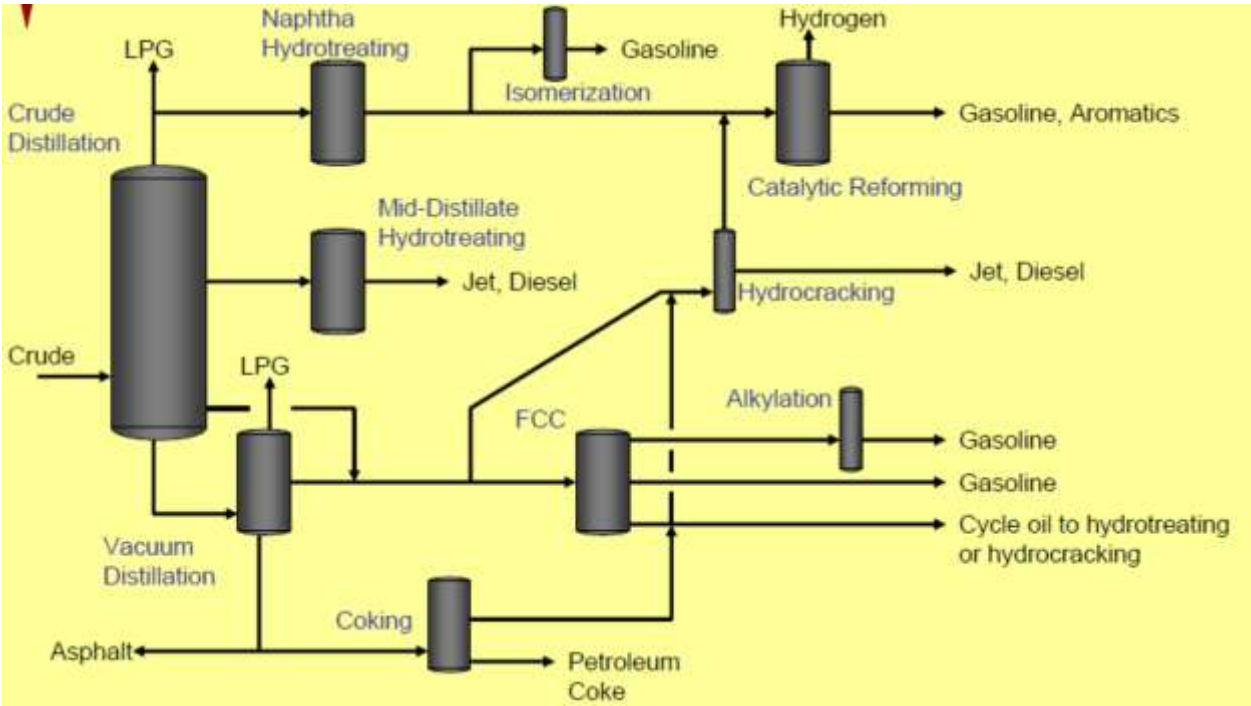

Figure 1: Generic Refining Process Schematic

2.0 Types of Petroleum Refineries

Crude oil must be refined in order to produce finished products. There are four basic operations that all the refineries perform for production of a variety of products. These are:

Topping

The topping refinery just separates the crude into its constituent petroleum products by distillation, known as Atmospheric Distillation. Topping Refinery produces naphtha but no gasoline.

Hydroskimming

The hydroskimming refinery is equipped with Atmospheric Distillation, naphtha reforming and necessary treating processes. This type of refinery is more complex than a topping refinery and it produces gasoline.

Cracking

The cracking or hydro cracking refinery, in addition to hydroskimming refinery, is equipped with vacuum distillation and catalytic cracking. The cracking refinery adds one more level of complexity to the hydroskimming refinery by reducing fuel oil by conversion to light distillates and middle distillates.

Coking

The coking refinery is equipped to process the vacuum residue into high value products using the Delayed Coking Process. The coking refinery adds further complexity to the cracking refinery by high conversion of fuel oil into distillates and petroleum coke.

Integrated

The integrated refinery is equipped to upgrade its LPG or Naphtha into basic petrochemicals by way of aromatics production of Benzene, Cyclo Hexene, Meta Xylene, Ortho Xylene, Para Xylene and Toluene or Naphtha cracking.

Petroleum refineries are large, capital-intensive manufacturing facilities with extremely complex processing schemes. They convert crude oils and other input streams into dozens of refined
(co-)products, including:

- ♦ Liquified petroleum gases (LPG)
- ♦ Gasoline
- ♦ Jet fuel
- ♦ Kerosene (for lighting and heating)
- ♦ Diesel fuel
- ♦ Petrochemical feedstocks
- ♦ Lubricating oils and waxes
- ♦ Home heating oil
- ♦ Fuel oil (for power generation, marine fuel, industrial and district heating)
- ♦ Asphalt (for paving and roofing uses).

Of these, the transportation fuels have the highest value; fuel oils and asphalt the lowest value.

3.0 Refinery Feed tock and Products

A petroleum refining study starts with describing its feedstock, the crude oil and the range of products that are produced by the various processes. Crude oil comes from different parts of the world and has different physical and chemical characteristics. On the other hand, the products that are produced have to meet market requirements and as such, should comply with certain specifications.

3.1 Liquid Fuels (Petroleum) Definition:

Petroleum is oily, flammable, thick dark brown or greenish liquid that occurs naturally in deposits, usually beneath the surface of the earth; it is also called as crude oil. Petroleum means rock oil, *(Petra – rock, elaion – oil, Greek and oleum – oil, Latin)*, the name inherited for its discovery from the sedimentary rocks. It is used mostly for producing fuel oil, which is the primary energy source today. Petroleum is also the raw material for many chemical products, including solvents, fertilizers, pesticides and plastics. For its high demand in our day-to-day life, it is also called as 'black gold'.

Oil in general has been used since early human history to keep fires ablaze, and also for warfare. Its importance in the world economy evolved slowly. In the search for new products, it was discovered that, from crude oil or petroleum, kerosene could be extracted and used as a light and heating fuel. Petroleum is often considered the lifeblood of nearly all other industry. For its high energy content (Table 1.2) and ease of use, petroleum remains as the **primary energy source**.

3.1.1 Composition of Crude Oils

Crude oil is a complex liquid mixture made up of a vast number of hydrocarbon compounds that consist mainly of carbon and hydrogen in differing proportions. In addition, small amounts of organic compounds containing sulfur, oxygen, nitrogen and metals such as vanadium, nickel, iron and copper are also present. Hydrogen to carbon ratios affect the physical properties of crude oil. As the hydrogen to carbon ratio decreases, the gravity and boiling point of the hydrocarbon compounds increases. Moreover, the higher the hydrogen to carbon ratio of the feedstock, the higher its value is to a refinery

because less hydrogen is required**. Table 2** shows that carbon and hydrogen contents vary within narrow ranges. For this reason, crude oil is not

classified on the basis of carbon content. Despite their low concentrations, impurities such as sulfur, nitrogen, oxygen and metals are undesirable because they cause concerns in the process ability of crude feedstock and because they affect the quality of the produced products. Catalyst
poisoning and corrosion are the most noticeable effects during refining.

Table 1.3: Overall tank Composition of Petroleum

Element	Percentage composition
Carbon	83.0-87.0
Hydrogen	10.0-14.0
Nitrogen	0.1-2.0
Sulphur	0.05-6.0
Oxygen	0.05-1.5

Petroleum also contains trace levels of nickel and vanadium (≈ 1000 ppm).
The chemical nature of crude petroleum varies with the part of the world in which it is found. The chemical and physical properties of petroleum are wells dependent, however, to be three principal verities.

3.1.1.1 Paraffinic Base Type Crude Petroleum

This type of petroleum is mainly composed of the saturated hydrocarbons from CH4 to C35 H72 and a little of the naphthenic and aromatics. The hydrocarbons from C18 H38 to C35 H72 are sometimes called waxes.

3.1.1.2 Asphaltic Base Type Crude Petroleum

It contains mainly cyclo- paraffins or napthenes with smaller amount of parffins and aromatic hydrocarbons.

3.1.1.3 Mixed Base Type Crude Petroleum

It contains both paraffinic and asphaltic hydrocarbons and is generally rich in semi-solid waxes.

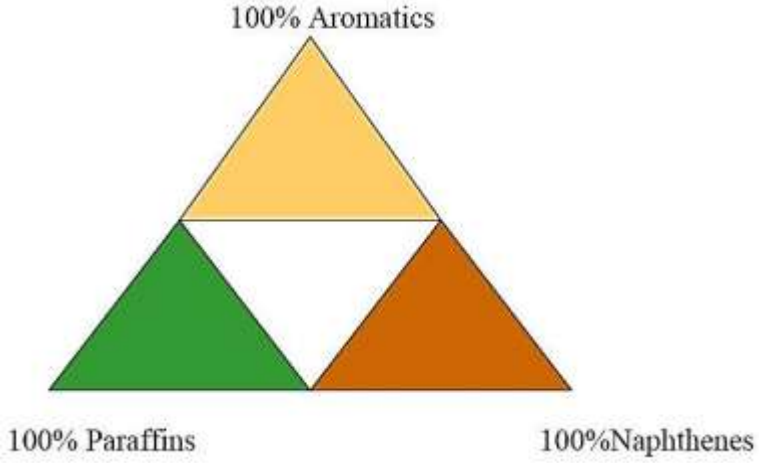

Figure 2: The pyramid of crude oil based on the hydrocarbon content with their percentages

Crude Classifications (in order of decreasing value)**:**

1) Paraffinic Crudes

• Paraffins + napthenes > 50%

• Paraffins > napthenes

• paraffins > 40%

2) Naphthenic Crudes

• Paraffins + napthenes >50%

• Napthenes > paraffins

• Napthenes >40%

3) Paraffinic – Naphthenic Crudes

• Aromatics < 50%

• paraffins < 40%

• Napthenes < 40%

4) Aromatic – Naphthenic Crudes

• Aromatics > 50%

5) Aromatic - Intermediate Crudes

• Aromatics > 50%

• Paraffins >10%

6) Aromatic – Asphaltic Crudes

• Napthenes > 25%

• paraffins < 10%

PRETEST 2: What is the API Gravity?

ANSWER: Crude oils are also defined in terms of API (American Petroleum Institute) gravity. The higher the API gravity, the lighter the crude will be.

API Ranges:

- Light crude oils have high API gravities; generally exceed 38 API^{o} and low specific gravities.
- Crude oils with low carbon, high hydrogen, and high API gravity are usually rich in paraffin and tend to yield greater proportions of gasoline and light petroleum products.
- Heavy crude oils are commonly with API gravity of 22 degrees or lower.
- Crude
- Oils with high carbon, low hydrogen, and low API gravities are usually rich in aromatics.
- Intermediate crude oils fall in range of 22 degree to 38API ^{o} gravity.

Notes:

- Extra heavy oil is defined with API gravity below 10.0 °API
- If its API gravity is greater than 10, it is lighter and floats on water if less than 10, it is heavier and sinks.
- Light crude oil receives a higher price than heavy crude oil on commodity markets because it produces a higher percentage of gasoline and diesel fuel when converted into products by an oil refinery. Heavy crude oil has more negative impact on the environment than its light counterpart since its refinement requires the use of more advanced techniques and the use of contaminants.
- The sweet light crude oil Western Texas Intermediate (WTI) is used as a benchmark in oil pricing.

West Texas Intermediate (WTI), a very high-quality, sweet, light oil delivered at Cushing, Oklahoma for North American oil.

PRETEST 3: Is there any relation between the type of contents of crude oil and the yield of crude oil refining processes?

ANSWER: There are several correlations between yield and the aromaticity and paraffinicity of crude oils, but the two most widely used are the Universal Oil Products (UOP) or Watson ‘‘characterization factor’’ (KW) and the U.S. Bureau of Mines ‘‘correlation index’’ (CI).

$$K_W = \frac{(T_b)^{\frac{1}{3}}}{SG_{15°C\ (60°F)}}$$

Where:

SG: Specific Gravity at 15oC (60 ^{o}F)

Tb: mean average boiling point (R) (MeABP)

Please Note: The Watson characterization factor ranges from less than 10 for highly aromatic materials to almost 15 for highly paraffinic compounds.

Also Note That: Crude Oils show a narrower range of KW and vary from 10.5 for highly naphthenic crude to 12.9 for paraffinic base crude.

$$CI = \frac{87{,}552}{T_B} + 473.7G - 456.8$$

3.1.2 Products Composition

There are specifications for over 2000 individual refinery products. Intermediate feed stocks can be routed to various units to produce different blend products depending on market demand. **Figure 2** shows typical refinery products with their carbon atom contents and boiling ranges. The specifications of each product are discussed in detail in the coming subsections.

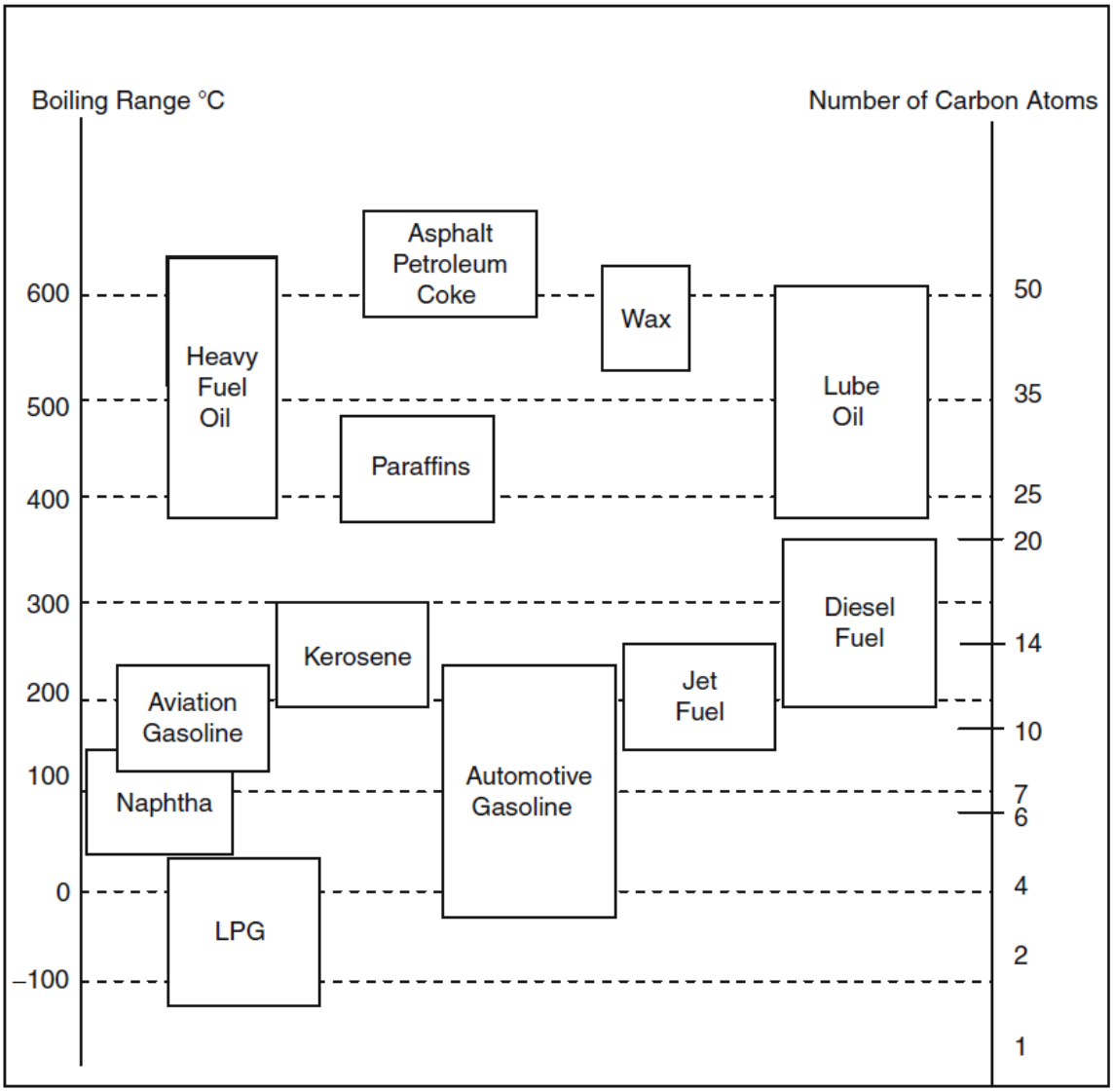

Figure 3: Principal petroleum products with carbon numbers and boiling ranges

3.2 Liquid Petroleum Gas (LPG):

Liquified petroleum gas is a group of hydrocarbon-based gases derived from crude oil refining or natural gas fractionation. They include ethane, ethylene, propane, propylene, normal butane, butylene, isobutane and isobutylene. For convenience of transportation, these gases are liquefied through pressurization.

3.3. Gasoline

Gasoline is classified by octane ratings (conventional, oxygenated and reformulated) into three grades: Regular, Midgrade and Premium.

- Regular gasoline: Gasoline having an antiknock index, i.e. octane rating, greater than or equal to 85 and less than 88.
- Mid-grade gasoline: Gasoline having octane rating, greater than or equal to 88 and less than or equal to 90.
- Premium gasoline: Gasoline having octane rating greater than 90. Premium and regular grade motor gasoline are used depending on the octane rating. In addition, aviation gasoline, which is a complex mixture of relatively volatile hydrocarbons, is blended with additives to form suitable fuel for aviation engines.

3.4. Kerosene

Kerosene oil is obtained between 180-250C^{o} during fractional distillation of crude petroleum. It is used as an illuminant, jet engine fuel, tractor fuel, and for preparing laboratory gas. With the development of jet engine, kerosene has become a material of far greater importance than it is used to be. When kerosene is used in domestic appliances, it is always vaporized before combustion. By using a fair excess of air it burns with a smokeless blue flame.

3.5. Jet Fuel

This category comprises both gasoline and kerosene and meets specifications for use in aviation turbine power units.

3.6. Diesel Fuel

The quality of diesel fuels can be expressed as cetane number or cetane index. The cetane number (CN) is expressed in terms of the volume percent of cetane (C16H34) which has high ignition (CN = 100) in a mixture with alpha-methyl-naphthalene (C11H10) which has

low ignition quality (CN = 0). Diesel fuel includes No.1 diesel (Super-diesel) which has cetane number of 45 and it is used in high speed engines, trucks and buses. No. 2 diesel has 40 cetane number. Railroad diesel fuels are similar to the heavier automotive diesel fuels, but have higher boiling ranges upto 400 C and lower cetane numbers (CN = 30).

3.7. Fuel Oil

The fuel oils are mainly used in space heating and thus the market is quite high specially in cold climates. No. 1 fuel oil is similar to kerosene and No. 2 fuel oil is very similar to No. 2 diesel fuel. Heavier grades of No. 3 and 4 are also available.

3.8. Residual Fuel Oil

It is mainly composed of vacuum residue. Critical specifications are viscosity and sulfur content. Low sulfur residues are in more demand in the market.

3.9. Lube Oil

Lubricants are based on the viscosity index. Paraffinic and naphthenic lubricants have a finished viscosity index of more than 75.

3.10. Asphalt

Asphalt is an important product in the construction industry and comprises up to 20% of products. It can be produced only from crude containing asphaltic material.

3.11. Petroleum Coke

Carbon compounds formed from thermal conversion of petroleum containing resins and asphaltenes are called petroleum cokes. Fuel grade coke contains about 85% carbon and 4% hydrogen. The balance is made up of sulfur, nitrogen, oxygen, vanadium and nickel.

Now you are ready to talk about each process!! It will be great to have a good student who can read extensively